TetraTec Instruments GmbH
Gewerbestrasse 8
71144 Steinenbronn
Deutschland
E-Mail: info@tetratec.de
Tel.: 07157/5387-0
Fax: 07157/5387-10

MANUAL

AUF-1000

Plug-on display

*** VERSION 1.0 ***
Update: 22.06.2006

TABLE OF CONTENTS

TABLE OF CONTENTS 2

TECHNICAL DESCRIPTION 3

SPECIFICATIONS 3

SPECIAL FEATURES 4

NOTE 4

REGULATED USAGE 4

OPERATING PRINCIPLE 4

INSTRUMENT INSPECTION 4

MECHANICAL CONNECTION 5

ELECTRICAL CONNECTION 5

ADJUSTING THE DISPLAY 6

DIMENSIONS 8

TECHNICAL DESCRIPTION

The AUF- series extremely compact 4-digit plug-on displays can be used with all common transmitters with 4 to 20 mA standard signal and electrical connector according to DIN 43650 to display the measuring values. For this they are only inserted into the existing connection (cf. figure). A separate power supply of the display unit is not necessary because it supplies itself from the transmitters' current loop.
Because of the bright red LED display the measuring values can be read very easily having bad lighting conditions. Furthermore the display unit can be turned in steps of 90°.
Special designs with open collector setpoint output, 3-wire technique or an approval for explosive areas are also available.

Following versions are available:
AUF-1000 Plug-on display, 4-20 mA, 2-wire
AUF-1001 Plug-on display with output, 4-20 mA, 2-wire
AUF-3000 Plug-on display, 4-20 mA, 3-wire

Special manual for
AUF-2000 Plug-on display EEx ib IIC T4, 4-20 mA, 2-wire

SPECIFICATIONS

Display

Type:	LED-display, red
Range:	-1999 .. 9999
Digits:	4 (with adjustable decimal point)
Digit height:	7,62 mm

Accuracy

Display:	0,2 % of span ± 1 digit
Temperature effect:	0,01 % / K

Temperature Conditions

Storage:	-30 .. +80 °C
Operation:	-10 .. +60 °C (AUF-100x, AUF-3000)
	-20 .. +60 °C (AUF-2000)

Enclosure

Dimensions:		51 x 41 x 48 mm (HxWxD)
Material	Front screen:	PMMA red
	Housing:	Plastic PA6 GF30
		(AUF-2000: polyamide)
Colours	Cap:	Black
	Body:	Black / Blue / Orange
Weight:		75 g
Ingress protection:		IP 65

Electrical Connection

Input:	4-pole jack acc. to DIN 43650
Output:	4-pole plug acc. to DIN 43650

AUF-100x and AUF-3000: permissible current load max. 60 mA,
voltage drop ≤5 V (load max. 250 Ω)

Power Supply

Self powering from current loop.

SPECIAL FEATURES

Operation
Menu control: Two keys.
Menu options: Scaling, decimal point, damping, error message switch point (only AUF-1001).
Messages
HI- or LO-display on leaving the range.
Conversion Rate
Adjustable from 3 to 25,5 measurements per second.
Damping
Adjustable from 0,3 to 20 seconds.
Set-Up Protection
The settings are save in the non-volatile EEPROM.
Mounting
Visibility: The display unit can be turned in steps of 90°.
PG screw joints: To connect such devices there are adapters with connector according to DIN 43650. They are simply screwed into the existing PG cable gland and wired to the device.
Open Collector Setpoint Output (AUF-1001)
PNP transistor with max. current load of 90 mA.
Explosion Protection (AUF-2000)
Approval: DMT 99 ATEX E 077 and BVS99.E.2037.
Protection Class: Ex II 2G Eex ib II C T4.

NOTE

Please read these operating instructions before unpacking and putting the unit into operation. Follow the instructions precisely as described. The devices are only to be used, maintained and serviced by persons familiar with these operating instructions and in accordance with local regulations applying to Health & Safety and prevention of accidents. When used in machines, the measuring unit should be used only when the machines fulfil the EWG-machine guidelines.

REGULAR USAGE

Only respecting of all points of the operation manual guarantees a failure-free operation of the device. For damages leading back to disregards of the operation manual, we can´t accept any liability.

OPERATING PRINCIPLE

The model AUF-2000 Plug-On Display is a universal local display suitable for use with various transmitters. The transmitter must be fitted with an analogue output and a connector in accordance with DIN 43 650. The plug-on display is simply plugged in between connector and socket; it is then ready for operation. Upon removal of the cover, scaling, the position of the decimal point and damping may be set with two keys. The setup menu steps are displayed in the display field.

INSTRUMENT INSPECTION

Instruments are inspected before shipping and sent out in perfect condition. Should damage to a device be visible, we recommend a thorough inspection of the delivery packaging. In case of damage, please inform your parcel service / forwarding agent immediately, since they are responsible for damages during transit.
Scope of delivery
- Plug-On Display
- Operation Manual
- Mounting screws
- self adhesive labels

MECHANICAL CONNECTION

The Plug-On Display is simply plugged in between the existing connector and socket and is then ready for operation. The existing mounting screw must be replaced with the longer screw which is part of the delivery. The sealings are to install between sensor/plug-on display and plug-on display/connector. If desired, the display can be rotated 90° in either direction. Below the LED-display the self adhesive label for the corresponding unit can be fixed.

ELECTRICAL CONNECTION

Connect the plug-on display as shown in the wiring diagram.

Steckerbelegung

	AUF-1000	**AUF-1001**	**AUF-3000**
PIN 1	+VS/S+	+VS/S+	+VS
PIN 2	GND/S-	GND/S-	GND
PIN 3	-	Switch out	Signal

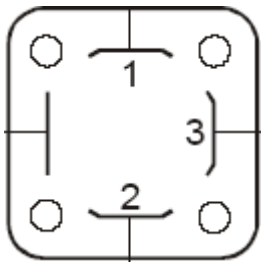

Power Supply Requirements

The power supply voltage (Ub), typically 24 VDC, must be greater than the sum of the: voltage drop across the sensor (Us) , the voltage drop across the display (5V) and any other voltage losses (Ua) (evaluation units, cable losses, etc.).

Commissioning Ub > Us + 5V + Ua

Switch Out (AUF-1001 only)

PIN 3: through a PNP-transistor the operation voltage Ub by reaching the switch point is powered. The maximum of the current consumption is 60 mA.

Pin Assignment AUF-1001

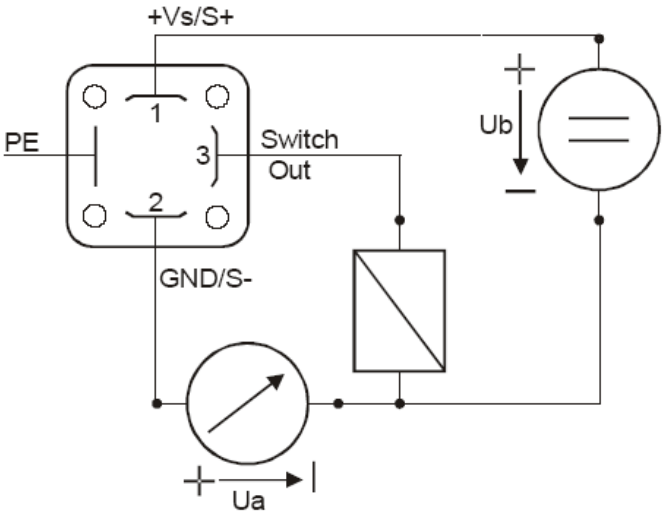

Pin Assignment AUF-3000

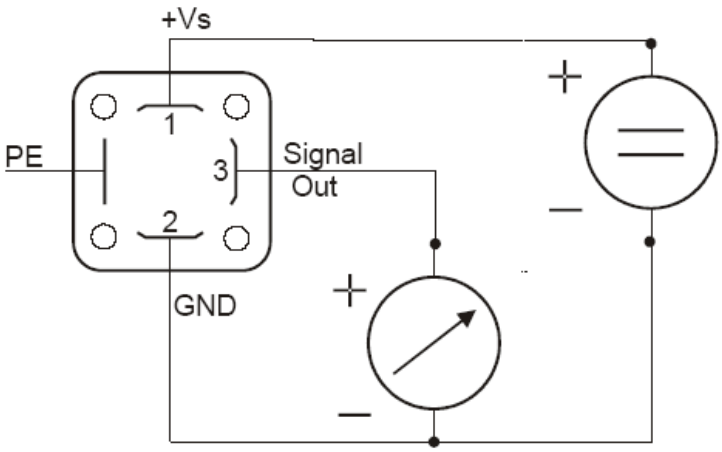

ADJUSTING THE DISPLAY

Adjusment of the menu items

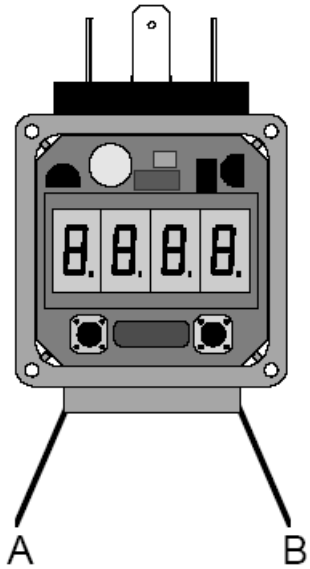

To adjust settings: Loosen and remove the four Phillips screws on the display and then remove the display cover hood.

A Downward and selection of menu items
B Upward and selection menu items
A+B Enter menu selection for adjustment or to exit adjustment mode

Decimal Point d P

Press key **B** until d P is displayed.

Press **A+B** to enter adjustment menu: - - - . -

Press **B** or **A** for up and down: - - . - -

Press **A+B** to acknowledge setting and return to menu item d P

Zero Point Z P 4 **(Value to be displayed for 4 mA.)**

Press **B** until: Z P 4 is displayed.

A+B to enter adjustment menu 0.00 for example.:(0 bar)
Press **B** or **A** for up and down
Press **A+B** to acknowledge setting and return to menu item **„ZP“**

Span E P 2 0 **(value to be displayed for 20 mA, “End Point”)**

Press key **B** until E P 2 0 is displayed.

Press **A+B** to enter adjustment menu: 0.00

Press **B** or **A** for up and down 60.00 (60 bar)
Press **A+B** to acknowledge setting and return to menu item **„EP“**

Damping F I L t

Press key **B** until F I L t is displayed.

Press **A+B** to enter adjustment menu: 0.3 (min. = 0,3 s; max.= 20,0 s)

Press **B** or **A** for up and down 1.5 (1,5 s)

Press **A+B** to acknowledge setting and return to menu item F I L t

Range Exceeded H I L O **(An indication of less than 4 mA or greater than 20 mA)**

Indicates “HI” if the upper limit or “LO” if the lower limit is exceeded

Press key **B** until H I L O is displayed.

Press **A+B** to enter adjustment menu: o F F message disabled

Press **B** or **A** for up and down o n message enabled

Press **A+B** to acknowledge setting and return to menu item H I L O
Indication: “HI” = Upper range exceeded, “LO” = Lower range exceeded

Caution: When the “HILO” indication is disabled, error code “Er06” is displayed if the scale range (-1999 to +9999) is exceeded.

Switch Point [S P t] **(Type AUF-1001 only, Option)**

Press key **B** until [S P t] is displayed.

Press **A+B** to enter adjustment menu: [0. 0 0]

Press **B** or **A** for up and down [2 0, 0 0] (20 bar)

Press **A+B** to acknowledge setting and return to menu item [S P t]

Please note: Standard hysteresis is the set switch point minus three digits (first digit is right). Hysteresis can be adjusted at the factory to customer specification

Switch Direction [d i r] **(Typ AUF-1001 only, Option)**

Press key **B** until [d i r] is displayed.
Press **A+B** to enter adjustment menu: „d n“ (Hysteresis over Switch point, inverse)
Press **B** or **A** for up and down „u p“ (Hysteresis below Switch Point)

Press **A+B** to acknowledge setting and return to menu item [d i r]

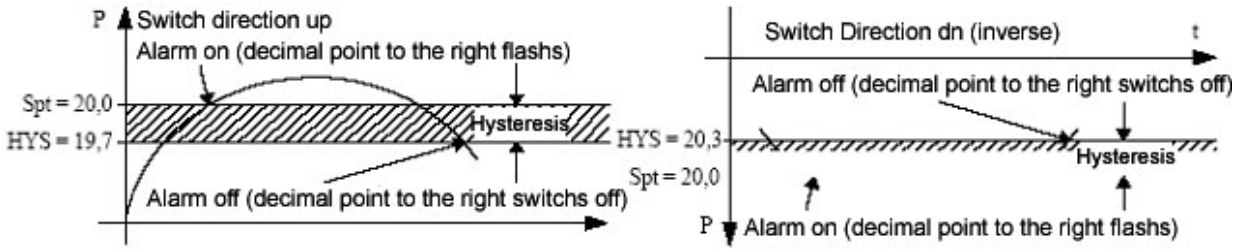

Return to Measuring Mode
Depending on the selected menu point, press key **A** or **B** from one to eight times.
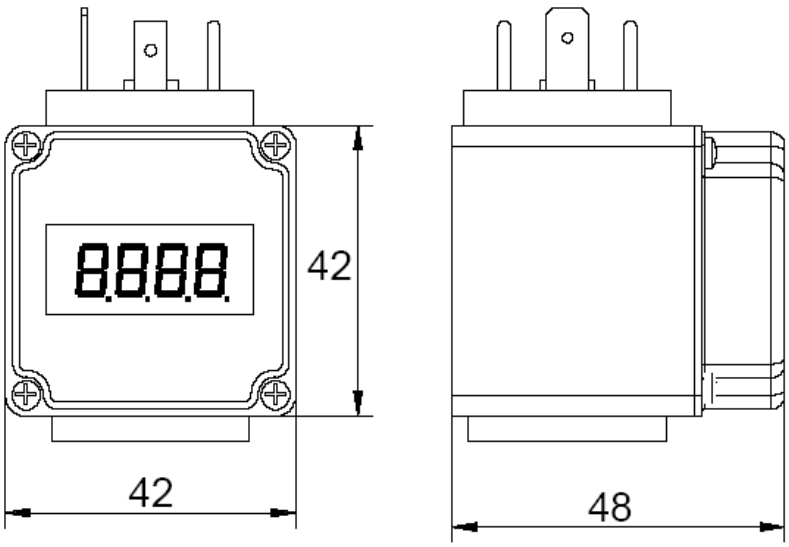
DIMENSIONS